Gevorderd: programmeer je brein

Het BYOR bordje geeft alleen maar data door van links naar rechts. Je kunt het brein ook slimmer maken met behulp van het Micro:Bit bordje dat ook in de koffer zit. De Micro:Bit kun je programmeren, waardoor je je creaties ineens veel meer kunnen! Hieronder lees je hoe je de Micro:Bit kunt programmeren.

BYOR is a small board that converts analog inputs to analog outputs but also powers sensors and actuators. Combined with a micro:bit it becomes a programmable input-output system that can power servos and small motors, as well as lights and sound for interactive installations. Quick step-by-step to get some powered inputs and outputs going! The BYOR kit is pricey, but we have one available at Programma Creatieve Technologie.

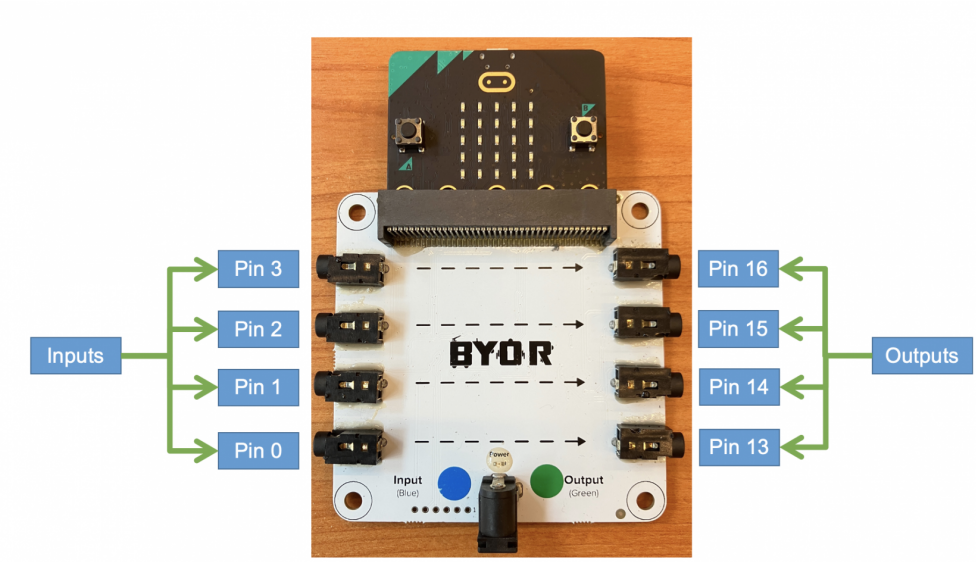

BYOR and Micro:bit

The BYOR kit comes with a set of sensors (blue boards) and actuators (green boards). These components are connected to the board through mini jacks.

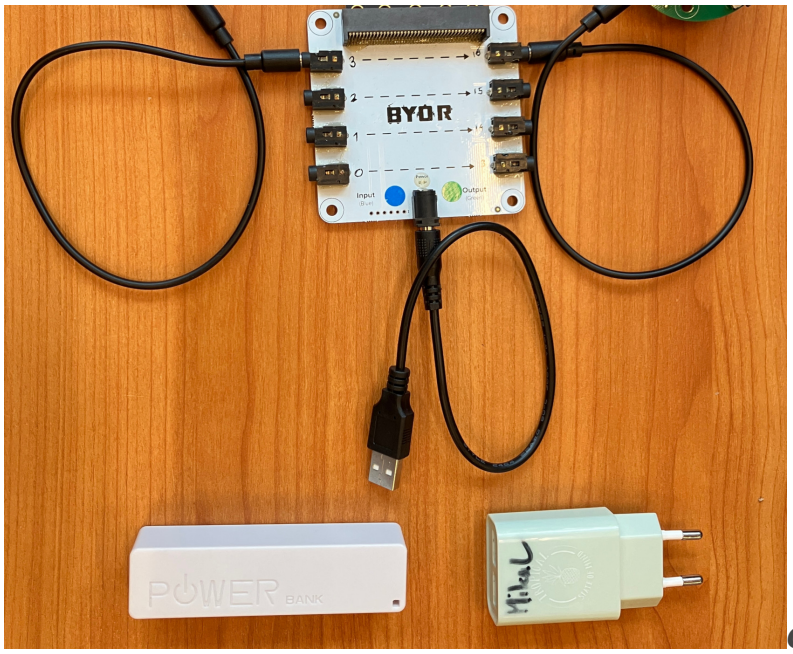

***Overview of a completed setup**: BYOR connected to a potentiometer on the left, a servo on the right, micro:bit on top and power (powerbank or plug) on bottom.*

Step 1: Write code

You can write code for the micro:bit on makecode.microbit.org. The BYOR has 4 input pins for the Micro:Bit (Pin 0-3) and 4 output pins (Pin 13-16). You can find the Pin blocks under Advanced->Pins.

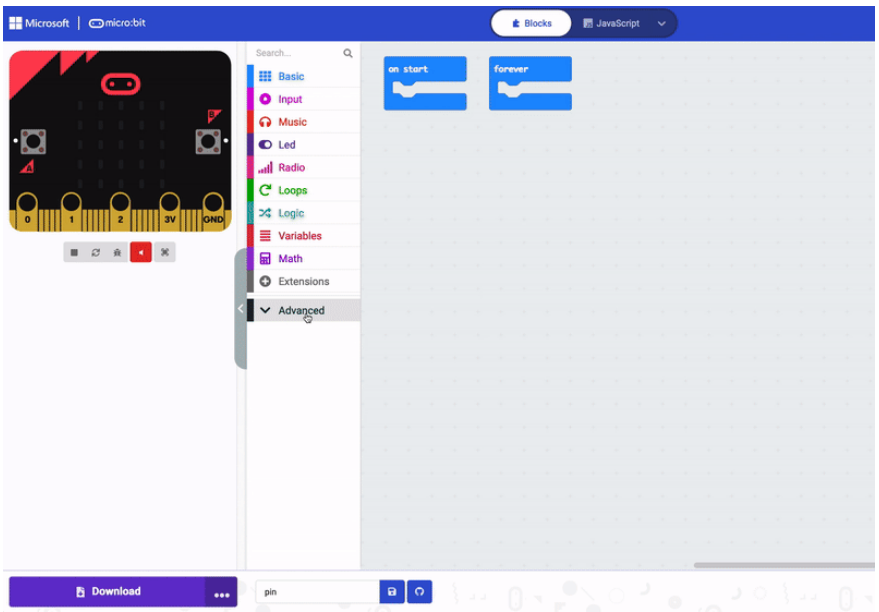

Step 2: Connect micro:bit

Connect the micro:bit (without BYOR) through USB to your computer. It will show up as a USB drive automatically.

Step 3: Save your code

Save your code manually to the USB drive, or click Download to Micro:Bit directly in the Makecode environment

Step 4: Disconnect

Disconnect the USB cable. When is it safe to do so? The micro:bit stops blinking and the USB drive will eject automatically. This lets you know the download is complete.

Step 5: Connect to BYOR and power on!

Push the micro:bit board into the BYOR board with the logo and A/B buttons towards you.

> Connect only power to the BYOR board, you don't need to power the micro:bit if it's inserted. The micro:bit will be powered through the BYOR board

Notes on the BYOR:

Power. It's not very clear how much power the BYOR board provides to the ports or whether there's any balancing. There are cable splitters (heaphone splitters) in the case and while this could be useful to add more outputs, the complete power draw will also increase. So while there are no clear guidelines on this, try not to overload the system...

Deze pagina is een kopie van de pagina hier.

Revision #2
Created 10 October 2024 08:10:55 by mikal
Updated 10 October 2024 08:22:05 by mikal